Unipolarno diferencijsko pojačalo sa strujnim izvorom

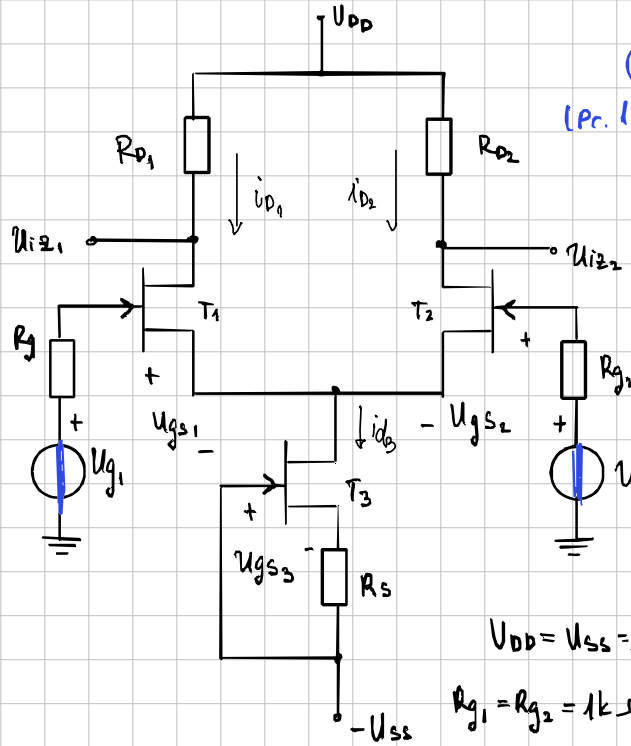

Statika

(Pr. 1.9)

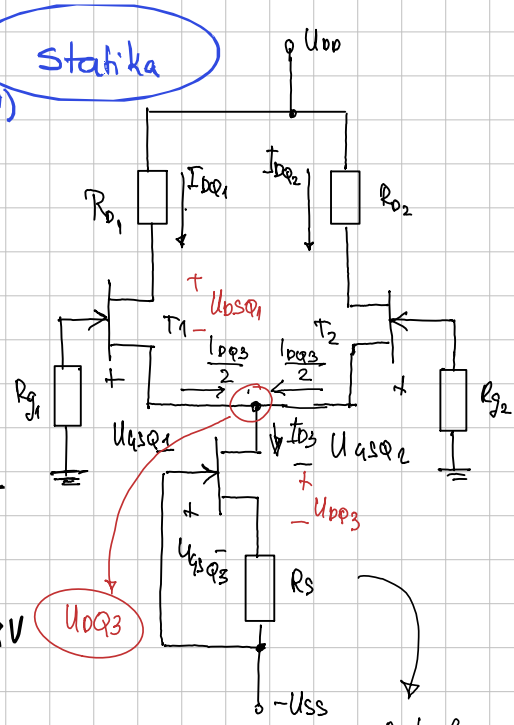

$U_{DD} = U_{SS} = 18\,V$

$R_{g_1} = R_{g_2} = 1\,k\Omega$

$I_{DSS_1} = I_{DSS_2} = 8\,mA$

$R_{D_1} = R_{D_2} = 5\,k\Omega$

$I_{DSS_3} = 9\,mA$

$U_{P_1} = U_{P_2} = -4\,V$

$U_{P_3} = -6\,V$

postavljen u područje zasićenja

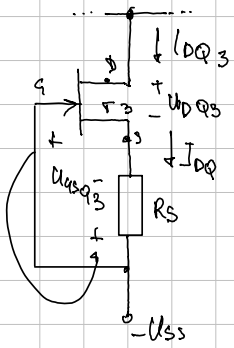

(1) $U_{GSQ3} = -I_{DQ} \cdot R_S$

(2) $I_{DQ3} = I_{DSS_3}\left(1 - \frac{U_{GSQ3}}{U_{P3}}\right)^2$

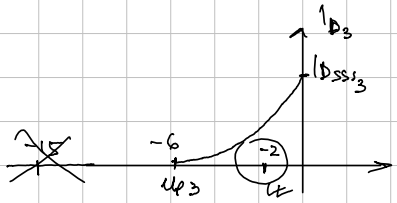

$U_{GSQ3} = -I_{DSS_3} \cdot R_S \left(1 - 2\frac{U_{GSQ3}}{U_{P3}} + \frac{U_{GSQ}^2}{U_{P3}^2}\right)$

$\dots \Rightarrow U_{GSQ3}^2 + 20\,U_{GSQ3} + 36 = 0$

$U_{GSQ3(1)} = -2V$

$U_{GSQ3(2)} = \cancel{-18V}$

$\Rightarrow I_{DQ3} = 4\,mA$

$I_{DQ1} = I_{DQ2} = \frac{I_{DQ3}}{2} = 2\,mA$

$U_{GSQ1,2} =$ (jednadž) $=$

$U_{GSQ1,2} = \left[1 \pm \sqrt{\frac{I_{DQ1}}{I_{SS1}}}\right] U_P = \dots = -2V$

između 0 i $U_{P1} \Rightarrow -$

! gateovi su uzemljeni

$U_{DQ3} = 0 - U_{GSQ1,2} = 2V$

$U_{DSQ1,2} = U_{DQ1} - U_{DQ3} = U_{DD} - I_{DQ1} \cdot R_{D1} - U_{DQ3} = \dots = 6V$

$U_{DSQ3} = U_{DQ3} - U_{SQ3} = U_{DQ3} = -[-U_{SS} + I_{DQ3} \cdot R_S] = \dots = 18V$

Dinamika (Pr. 1.10)

Dinamički parametri

$$g_m = \left.\frac{\partial i_D}{\partial u_{GS}}\right|_Q \qquad r_d = \left.\left(\frac{\partial i_D}{\partial u_{DS}}\right)^{-1}\right|_Q$$

$$g_{m3} = -2\,\frac{I_{DSS3}}{U_{P3}}\left(1-\frac{U_{GSQ3}}{U_{P3}}\right)\left(1+\lambda U_{DSQ3}\right) = \dots = \underline{\underline{2{,}07\ mA/V}}$$

$$r_{d3} = \dots = \underline{\underline{125\,k\Omega}} \longrightarrow \mu_3 = g_{m3}\cdot r_{d3} = \underline{\underline{259}}$$

$$g_{m1} = g_{m2} = \dots = \underline{\underline{2{,}02\ mA/V}} \qquad r_{d1,2} = \dots = \underline{\underline{250\,k\Omega}} \Rightarrow \underline{\underline{\mu_1 = \mu_2 = 505}}$$

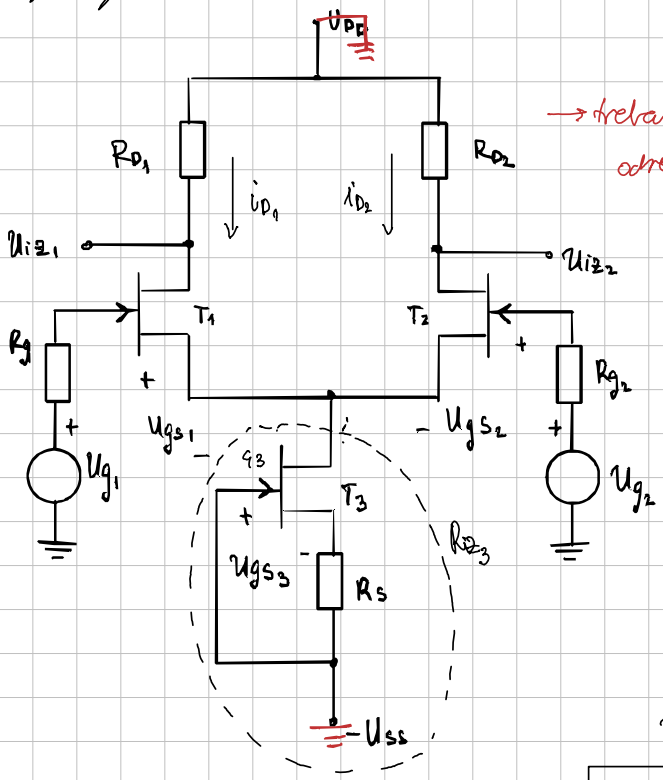

→ trebamo nadomjesnu shemu za određivanje izlaznog otpora T_3

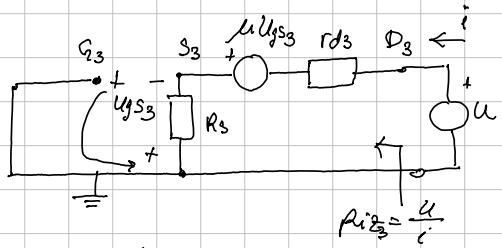

$$u = i\cdot r_{d3} - \mu\cdot U_{gs3} - U_{gs3}$$

$$u = i\cdot r_{d3} - U_{gs3}(\mu+1)$$

$$U_{gs3} = -i\cdot R_S$$

$$u = i\left(r_{d3} + R_S(\mu+1)\right)$$

$$\Longrightarrow \boxed{R_{iz3} = r_{d3} + (\mu+1)R_S} = \dots = \underline{\underline{255\,k\Omega}}$$

ZAJEDNIČKI SIGNAL

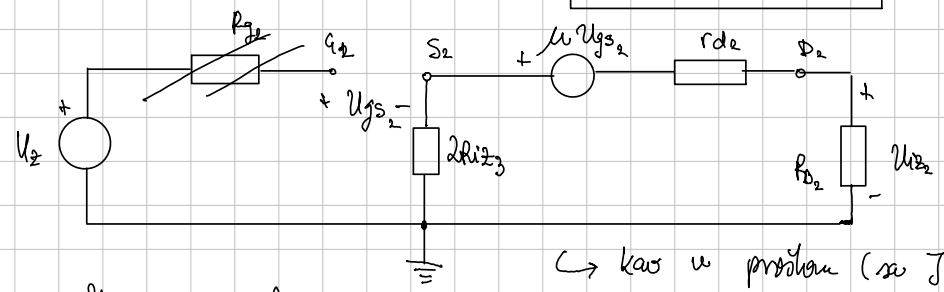

↳ kao u prošlom (sa JFET-om)

$$A_{vz2} = \frac{U_{iz2}}{U_z} = \frac{-\mu R_{D2}}{R_{D2} + r_{d2} + (1+\mu)\cdot 2\cdot R_{iz3}} = \dots = \underline{\underline{-9.77\times10^{-3}}}$$

↳ znatno bolje nego sa nadomjesnim otporom

degeneracija, puno veći
⇒ bolje se guši

DIFERENCIJSKI SIGNAL:

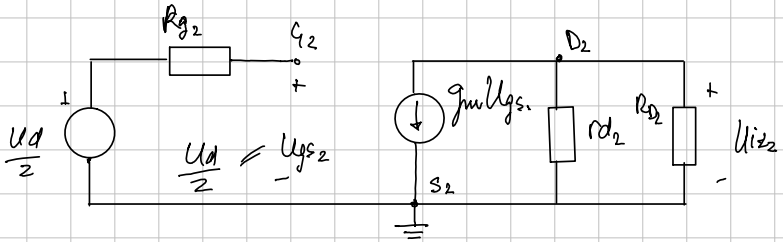

$$A_{vd_2} = \frac{U_{iz_2}}{U_d} = \frac{1}{2}\,\frac{U_{iz}}{\frac{U_d}{2}}$$

$$U_{iz_2} = -g_m U_{gs}(r_{d_2} \parallel R_{D_2})$$

$$\Rightarrow \boxed{A_{vd_2} = \frac{-1}{2} g_m (r_{d_2} \parallel R_{D_2})} = \dots = \underline{\underline{-4.95}}$$

kao u prethodnoj izvedbi

→ za zajednički signal ovo je bolje

$$f = \left|\frac{A_{vd}}{A_{vz}}\right| = \dots = 506 = \underline{\underline{54,1\,dB}}$$

Prijenosna karakteristika

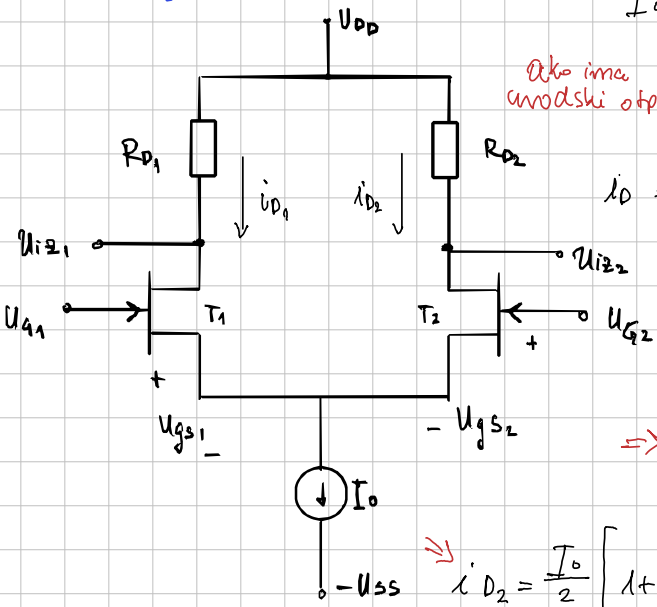

$$I_0 = \frac{U_S + U_{SS}}{R_S} \approx \frac{U_{SS}}{R_S}$$

ako ima uvodski otpornik

$$I_0 = i_{D_1} + i_{D_2} \quad (1)$$

$$i_D = I_{DSS}\left(1 - \frac{u_{GS}}{U_P}\right)^2 \rightarrow u_{GS} = U_P\left(1 - \sqrt{\frac{i_D}{I_{DSS}}}\right)$$

$$u_D = u_{G_2} - u_{G_1} = u_{GS_2} - u_{GS_1}$$

$$\Rightarrow u_D = \frac{-U_P}{\sqrt{I_{DSS}}}\left(\sqrt{i_{D_2}} - \sqrt{i_{D_1}}\right) \quad (2)$$

$$\Rightarrow i_{D_2} = \frac{I_0}{2}\left[1 + \sqrt{2\frac{I_{DSS}}{I_0}\left(\frac{u_D}{-U_P}\right)^2 - \left(\frac{I_{DSS}}{I_0}\right)^2\left(\frac{u_D}{-U_P}\right)^4}\right]$$

$$(2) \rightarrow \sqrt{I_{DSS}} \cdot \left(\frac{-U_D}{U_P}\right) = \sqrt{i_{D_2}} - \sqrt{i_{D_1}} \quad /^2$$

$$I_{DSS} \cdot \left(\frac{-U_D}{U_P}\right) = i_{D_2} - 2\sqrt{i_{D_2} \cdot i_{D_1}} + i_{D_1}$$

$$I_0 - I_{DSS} \cdot \left(\frac{U_D}{-U_P}\right)^2 = 2\sqrt{i_{D_2} \cdot i_{D_1}} \quad /^2$$

$$I_0^2 = (i_{D_1} + i_{D_2})^2 = i_{D_1}^2 + 2 i_{D_1} \cdot i_{D_2} + i_{D_2}^2$$

$$I_0^2 - 2 I_0 I_{DSS} \cdot \left(\frac{U_D}{-U_P}\right)^2 + I_{DSS}^2 \cdot \left(\frac{U_D}{-U_P}\right)^4 = 4 i_{D_2} \cdot i_{D_1}$$

$$i_{D_1}^2 + 2 i_{D_1} \cdot i_{D_2} + i_{D_2} - 4 i_{D_2} \cdot i_{D_1} = 2 I_0 I_{DSS} \cdot \left(\frac{U_D}{-U_P}\right)^2 - I_{DSS}^2 \left(\frac{U_D}{-U_P}\right)^4$$

$$(i_{D_1} - i_{D_2})^2 = 2 I_0 I_{DSS} \cdot \left(\frac{U_D}{-U_P}\right)^2 - I_{DSS}^2 \cdot \left(\frac{U_D}{-U_P}\right)^4$$

$$i_{D_1} = I_0 - i_{d_2}$$

$$I_0 - 2 i_{d_2} = \sqrt{2 I_0 \cdot I_{DSS} \cdot \left(\frac{U_D}{-U_P}\right)^2 - I_{DSS}^2 \cdot \left(\frac{U_D}{-U_P}\right)^4}$$

$$\Rightarrow \boxed{i_{d_2} = \frac{I_0}{2}\left[1 + \sqrt{\text{—}\|\text{—}}\right]}$$

$$u_D = U_0 = -U_P\sqrt{\frac{I_0}{I_{DSS}}} \longrightarrow i_{D_1} = \frac{I_0}{2}\left[1 - \frac{u_D}{U_0}\sqrt{2-\left(\frac{u_D}{U_0}\right)^2}\right]$$

$$i_{D_2} = \frac{I_0}{2}\left[1 + \frac{u_D}{U_0}\sqrt{2-\left(\frac{u_D}{U_0}\right)^2}\right]$$

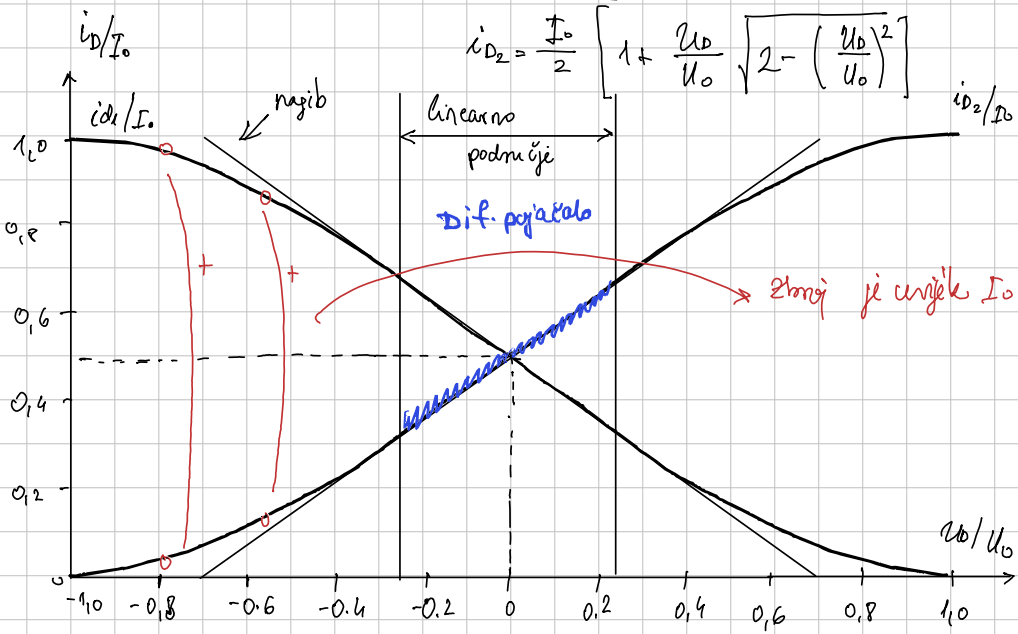

Za $u_D \ll \sqrt{2}\,U_0$ $\quad i_{D_2} \approx \frac{I_0}{2}\left(1 + \sqrt{2}\,\frac{u_D}{U_0}\right)$

$$G_{m,max} = \left|\frac{\partial i_{D_1}}{\partial u_D}\right| = \left|\frac{\partial i_{D_2}}{\partial u_D}\right| = \frac{I_0}{\sqrt{2}\,U_0} = \frac{1}{2}g_m$$

$$G_{m,max} = \frac{I_0}{\sqrt{2}\cdot U_0} = \frac{\cancel{I_0}^{\sqrt{I_0}}}{\sqrt{2}\cdot(-U_P)}\cdot\sqrt{\frac{I_{DSS}}{\cancel{I_0}}} = \sqrt{\frac{I_0\cdot I_{DSS}}{2}}\cdot\frac{1}{-U_P}$$

$I_0 = I_{D_{1,2}}$ (pola u svého grafu)

$I_{D_{Q1,2}}$

$$= \sqrt{I_{DSS}\left(1-\frac{U_{GSQ}}{U_P}\right)^2\cdot I_{DSS}}\cdot\frac{1}{-U_P}$$

$$\boxed{G_{m,max} = \frac{I_{DSS}}{-U_P}\left(1-\frac{U_{GSQ}}{U_P}\right)}$$

$$\forall\ g_m = \frac{2\,I_{DSS}}{-U_P}\left(1-\frac{U_{GSQ}}{U_P}\right) \Longrightarrow G_{m,max} = \frac{1}{2}g_m$$